DATASHEET

Stripe X1 Overlay

patented technology

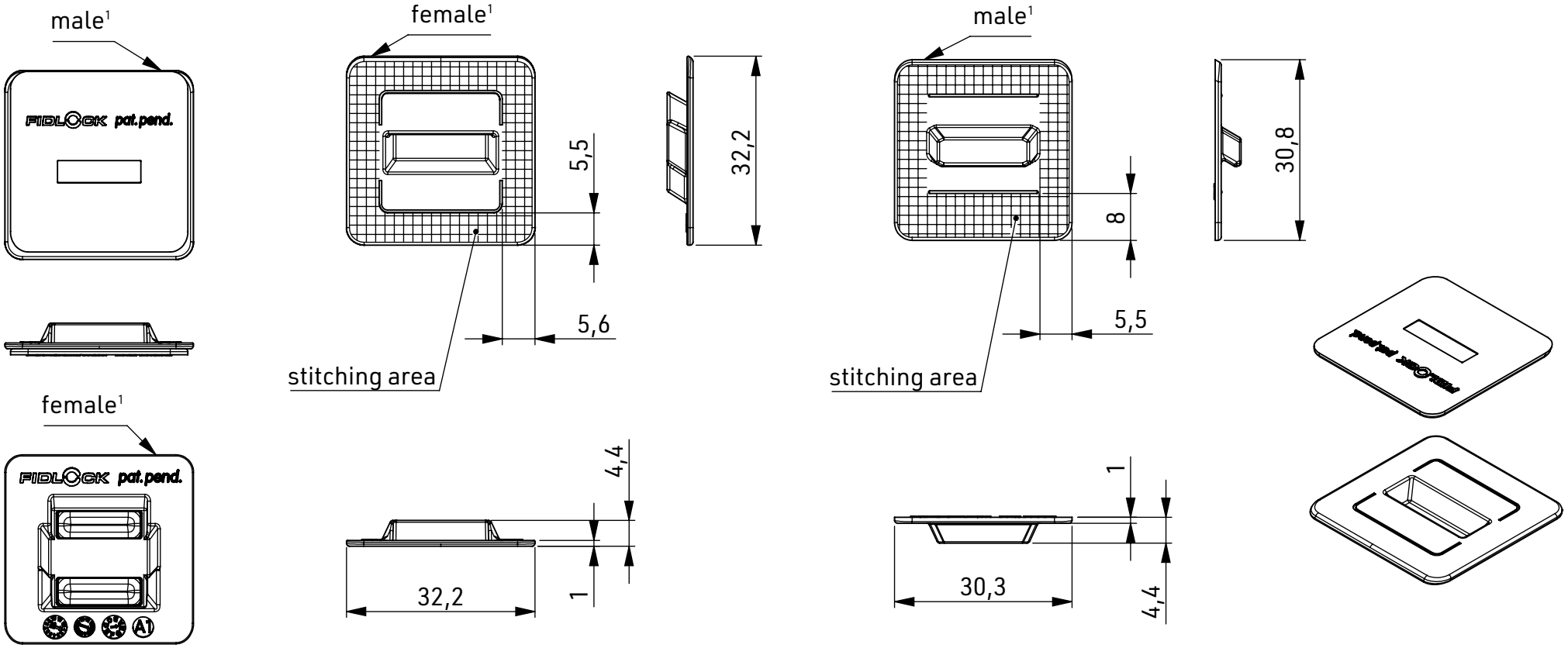

nominal values in millimeters [mm]

OPENING	lift	GENERAL NOTES*	Stichting area:Proceed like stitching zipper.Use a zipper presser foot with stitch length 2-3 mm. (For securing the thread we recommend choosing a position next to the Fidlock part. Otherwise stability can be reduced)
MATERIAL	[1]PA6, Epoxy, NdFeB		
COLOUR	black		
WEIGHT	~ 6 g (weighed)		
BREAKING LOAD**	dependant on application		

ARTICLE NO.	01363-000001 (BLK)
PRODUCT	Stripe X1 SET Overlay
SCALE	1:1 DIN A4
REVISION / DATE	R00 24.08.23

* The manufacturer of the end products in which FIDLOCK fasteners are used, bears the responsibility for thoroughly testing that the FIDLOCK products are suitable for the intended applications.
** According to test specification QM-TP-001

Subject to change without notice, errors excepted
Fidlock GmbH | Kirchhorster Straße 39 | 30659 Hannover | Germany