DATASHEET

HOOK 25 reverse

patented technology

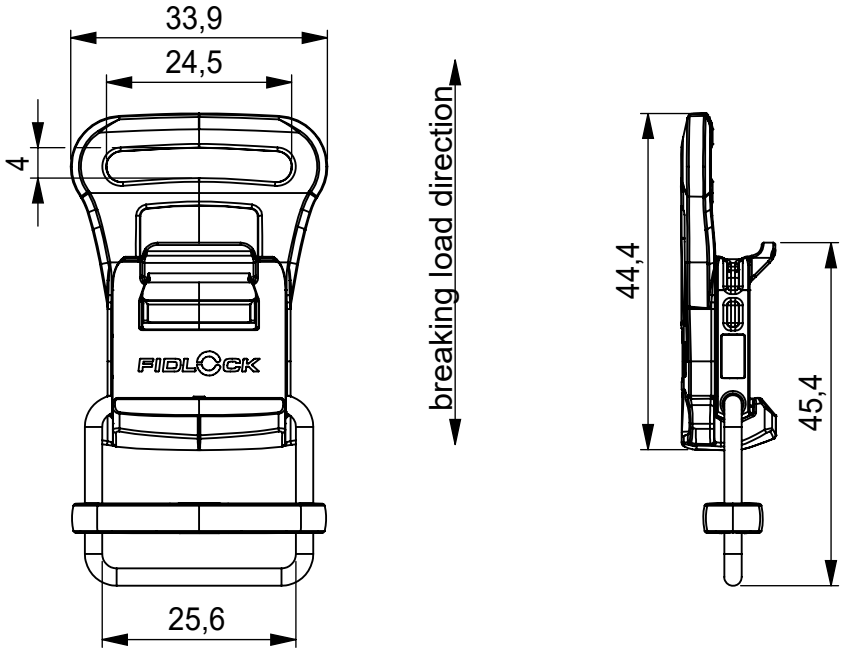

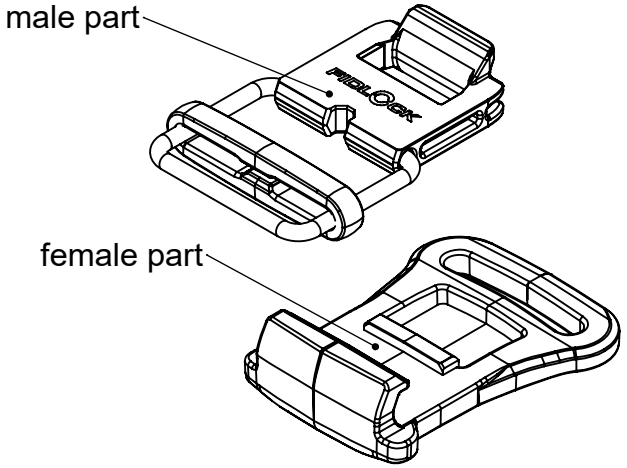

nominal values in millimeters [mm]

OPENING	lift
MATERIAL* **	PA66GF (53%), NdFeB (25%), stainless steel (20%), epoxy (2%)
COLOUR	black
WEIGHT	~ 13,4 g (weighed)
BREAKING LOAD**	410 N

GENERAL NOTES*

ARTICLE NO.	FH-53234-000002(BLK)
PRODUCT	HOOK 25 reverse
SCALE	1:1 DIN A4
REVISION / DATE	R01 14.10.2026

* The manufacturer of the end products in which FIDLOCK fasteners are used, bears the responsibility for thoroughly testing that the FIDLOCK products are suitable for the intended applications.

** According to test specification QM-TP-001

*** The nominal mass fractions percentage of the materials are given as rounded whole numbers. Fractions below 0.5% are not given.

Subject to change without notice, errors excepted

Fidlock GmbH | Kirchhorster Straße 39 | 30659 Hannover | Germany