DATASHEET

HOOK 25 plastic

patented technology

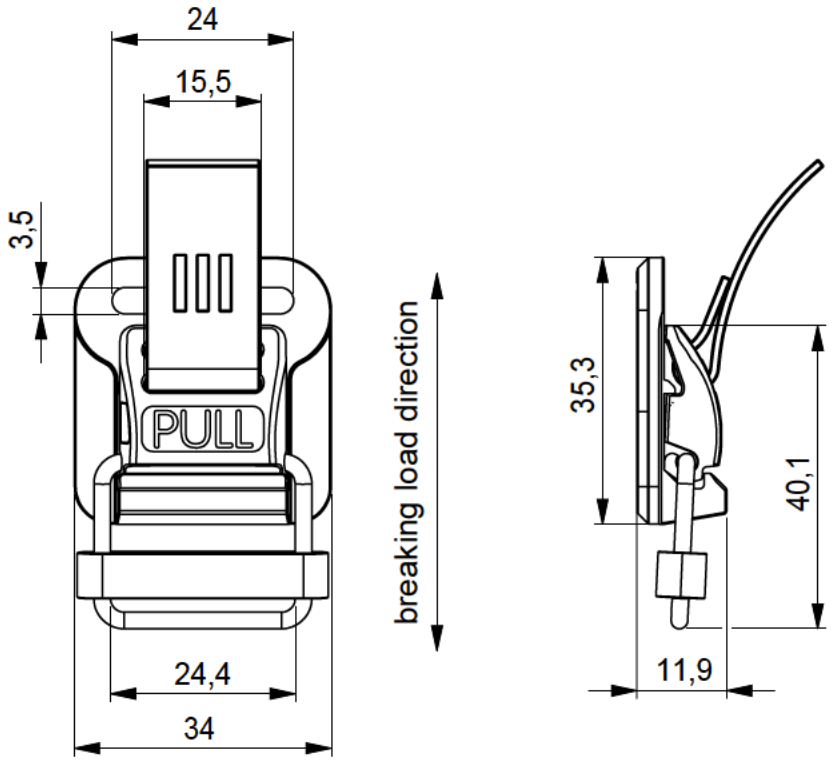

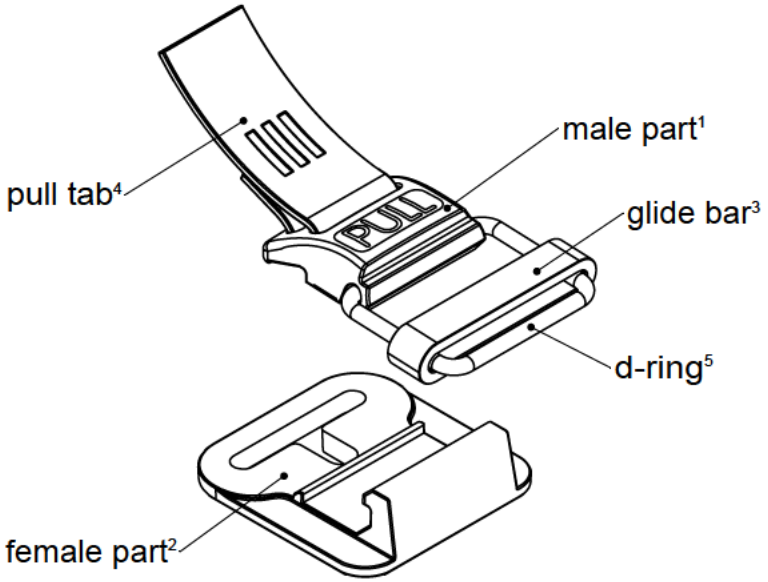

nominal values in millimeters [mm]

OPENING	lift
MATERIAL* **	NdFeB (32%), PA66GF[2,3] (29%), stainless steel[6] (22%), PA6[1] (12%), PES[4] (fabric) (3%), epoxy (2%)
COLOUR	black with red pull tab
WEIGHT	~ 12,5 g (weighed)
BREAKING LOAD**	535 N

GENERAL NOTES*

ARTICLE NO.	H-22024-000002(BLK)
PRODUCT	HOOK 25 plastic
SCALE	1:1 DIN A4
REVISION / DATE	R01 14.10.2026

* The manufacturer of the end products in which FIDLOCK fasteners are used, bears the responsibility for thoroughly testing that the FIDLOCK products are suitable for the intended applications.
** According to test specification QM-TP-001
*** The nominal mass fractions percentage of the materials are given as rounded whole numbers. Fractions below 0.5% are not given.

Subject to change without notice, errors excepted
Fidlock GmbH | Kirchhorster Straße 39 | 30659 Hannover | Germany