DATASHEET

HOOK 20 sternum strap

patented technology

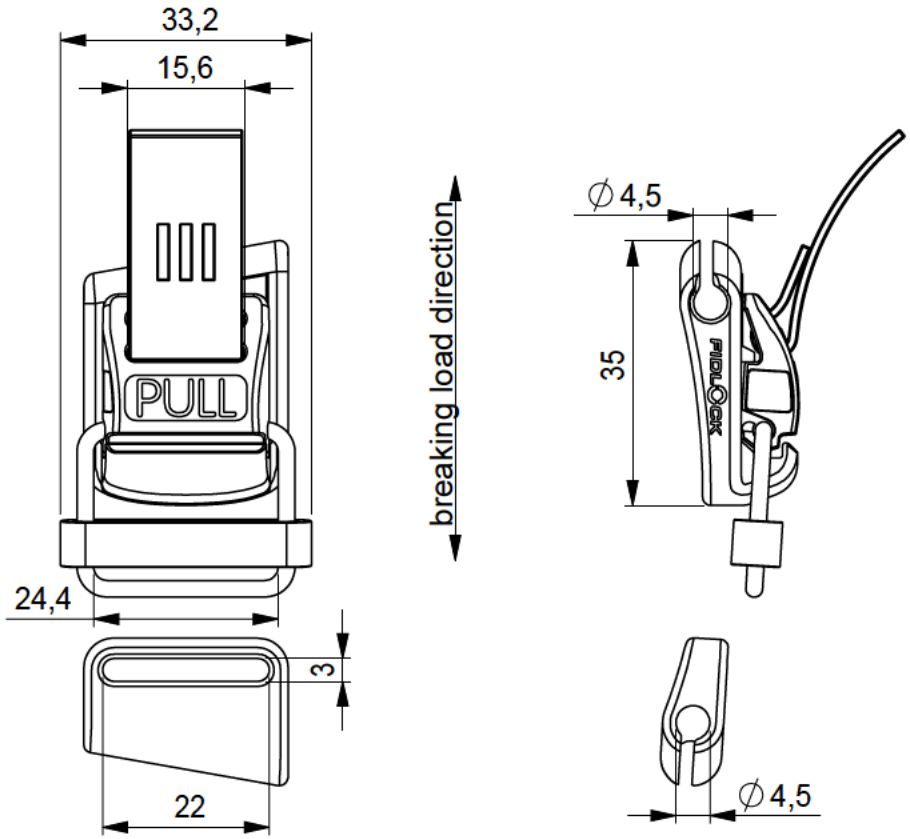

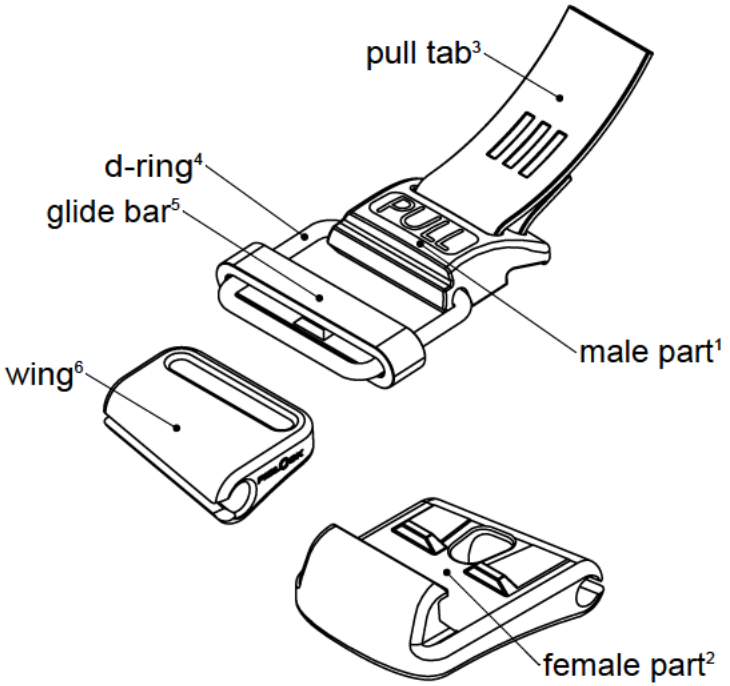

nominal values in millimeters [mm]

OPENING	lift
MATERIAL* **	PA66GF (42%), NdFeB (30%), stainless steel (16%), PA6 (9%), PES (fabric) (2%), epoxy (1%)
COLOUR	black with red pulltab
WEIGHT	~16,8 g (weighed)
BREAKING LOAD**	195 N

GENERAL NOTES*

ARTICLE NO.	H-22121-000002(BLK)
PRODUCT	HOOK 20 sternum strap
SCALE	1:1 DIN A4
REVISION / DATE	R01 14.10.2026

* The manufacturer of the end products in which FIDLOCK fasteners are used, bears the responsibility for thoroughly testing that the FIDLOCK products are suitable for the intended applications.
** According to test specification QM-TP-001
*** The nominal mass fractions percentage of the materials are given as rounded whole numbers. Fractions below 0.5% are not given.

Subject to change without notice, errors excepted
Fidlock GmbH | Kirchhorster Straße 39 | 30659 Hannover | Germany