DATASHEET

HOOK 25 plastic open d-ring RC

patented technology

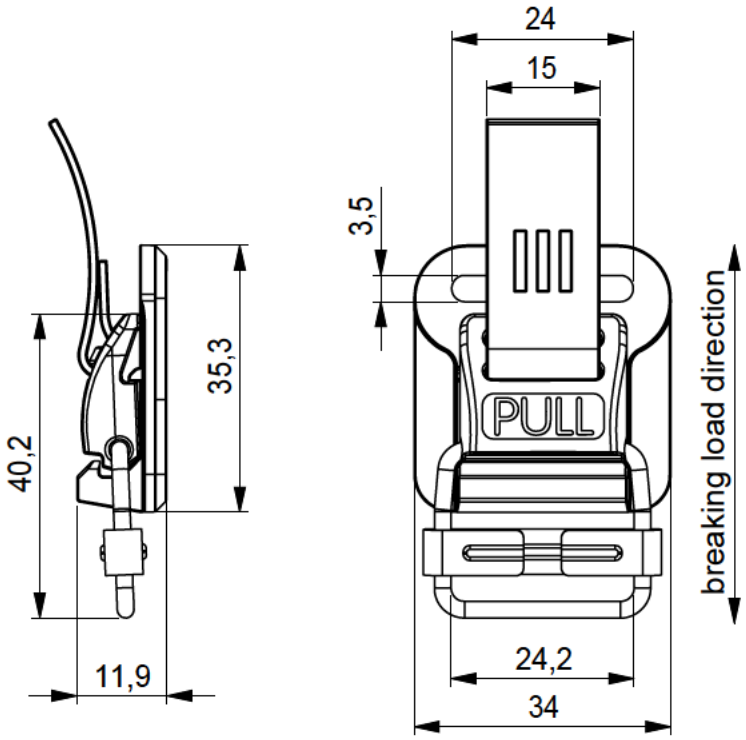

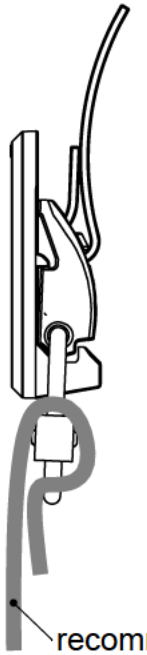

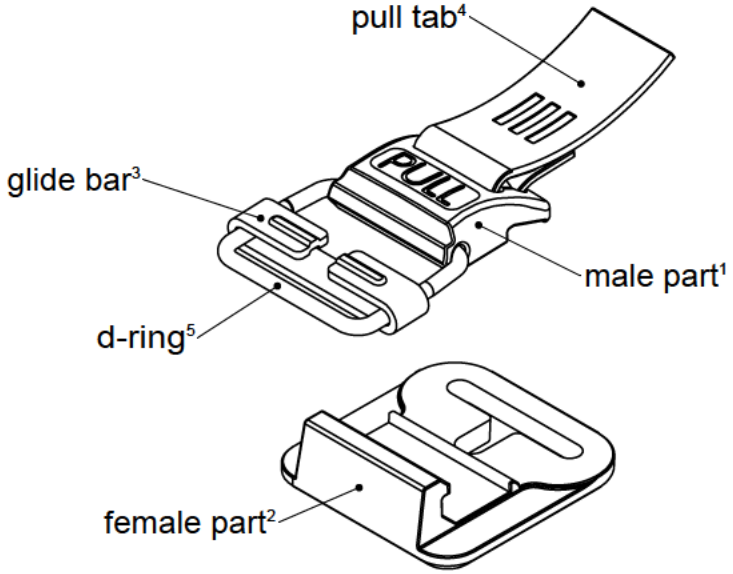

nominal values in millimeters [mm]

OPENING	lift
MATERIAL* **	stainless steel[3,5] (36%), Ocean Material (PA66GF)[1,2] (35%), NdFeB (26%), PES[4] (fabric) (2%), epoxy (1%)
COLOUR	black with red pull tab (BLK), blue with black pull tab (5415)
WEIGHT	~ 15,9 g (weighed)
BREAKING LOAD**	400 N

GENERAL NOTES*

Recycled material:
Not suitable for safety-relevant applications

Coloured options:
Colour may vary, due to raw material.
Minor dark particals may appear,
due to raw material.

ARTICLE NO.	H-22424-000002(BLK)R H-22424-000002(5415)R
PRODUCT	HOOK 25 plastic open d-ring RC
SCALE	1:1 DIN A4
REVISION / DATE	R02 14.10.2026

* The manufacturer of the end products in which FIDLOCK fasteners are used, bears the responsibility for thoroughly testing that the FIDLOCK products are suitable for the intended applications.
** According to test specification QM-TP-001
*** The nominal mass fractions percentage of the materials are given as rounded whole numbers. Fractions below 0.5% are not given.

Subject to change without notice, errors excepted
Fidlock GmbH | Kirchhorster Straße 39 | 30659 Hannover | Germany