DATASHEET

HOOK 40 adjuster

patented technology

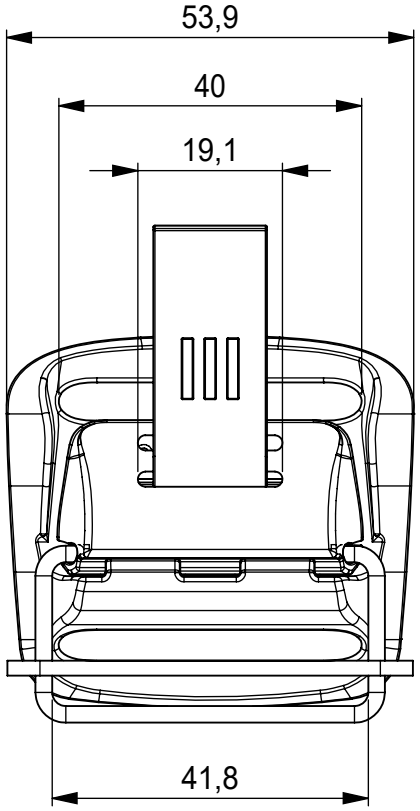

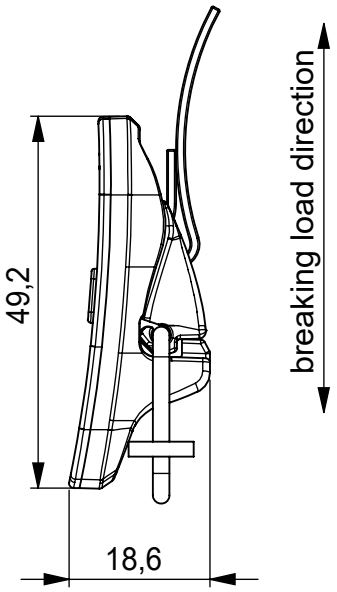

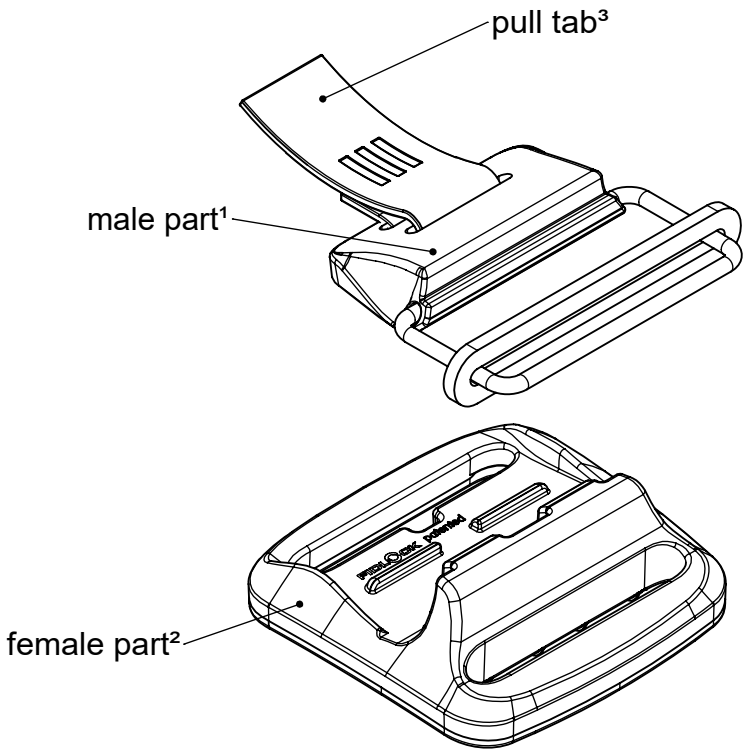

nominal values in millimeters [mm]

OPENING	lift
MATERIAL* **	PA66GF[2] (37%), stainless steel[1] (28%), NdFeB[1,2] (23%), PA6[1] (10%), PES[3] (1%), epoxy
COLOUR	black
WEIGHT	~ 35 g (weighed)
BREAKING LOAD**	1250 N

GENERAL NOTES*

ARTICLE NO.	H-24142-000002(BLK)
PRODUCT	HOOK 40 adjuster
SCALE	1:1 DIN A4
REVISION / DATE	R00 07.04.26

* The manufacturer of the end products in which FIDLOCK fasteners are used, bears the responsibility for thoroughly testing that the FIDLOCK products are suitable for the intended applications.

** According to test specification QM-TP-001

*** The nominal mass fractions percentage of the materials are given as rounded whole numbers. Fractions below 0.5% are not given.

Subject to change without notice, errors excepted

Fidlock GmbH | Kirchhorster Straße 39 | 30659 Hannover | Germany