DATASHEET

HOOK 40 tough

patented technology

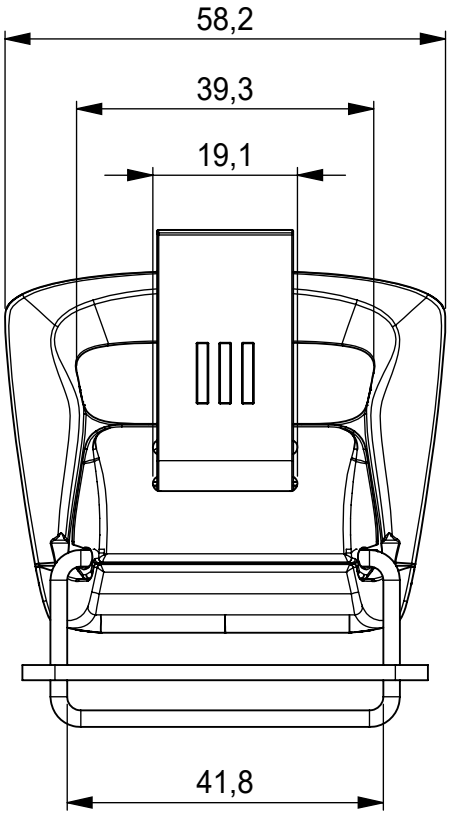

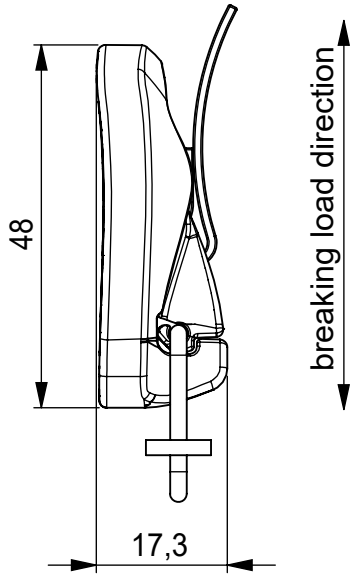

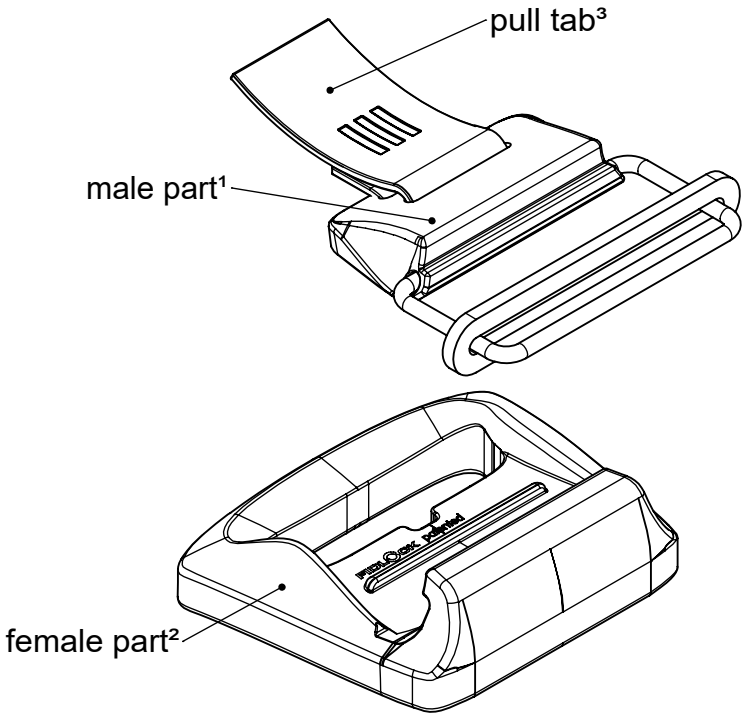

nominal values in millimeters [mm]

OPENING	lift
MATERIAL* **	PA66GF¹ (49%), stainless steel¹ (21%), NdFeB[1,2] (17%), PA6² (7%), PES³ (4%), epoxy (1%)
COLOUR	black
WEIGHT	~ 40 g (weighed)
BREAKING LOAD**	3385 N

GENERAL NOTES*

ARTICLE NO.	H-24143-000001(BLK)
PRODUCT	HOOK 40 tough
SCALE	1:1 DIN A4
REVISION / DATE	R00 01.04.26

* The manufacturer of the end products in which FIDLOCK fasteners are used, bears the responsibility for thoroughly testing that the FIDLOCK products are suitable for the intended applications.

** According to test specification QM-TP-001

*** The nominal mass fractions percentage of the materials are given as rounded whole numbers. Fractions below 0.5% are not given.

Subject to change without notice, errors excepted

Fidlock GmbH | Kirchhorster Straße 39 | 30659 Hannover | Germany