DATASHEET

# *HOOK 25 reverse LL*

patented technology

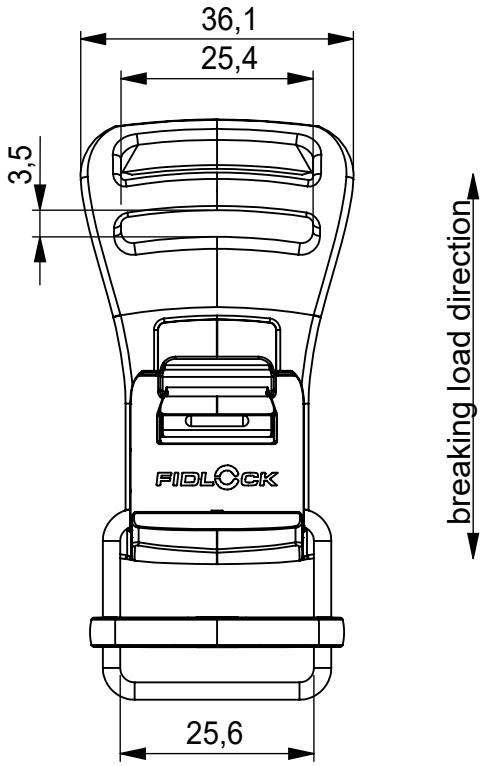





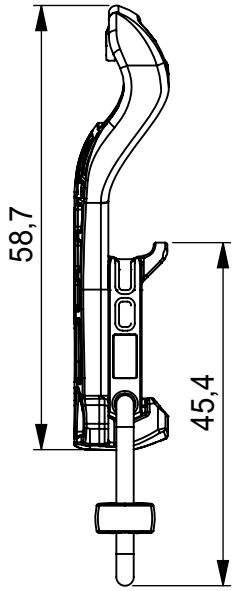


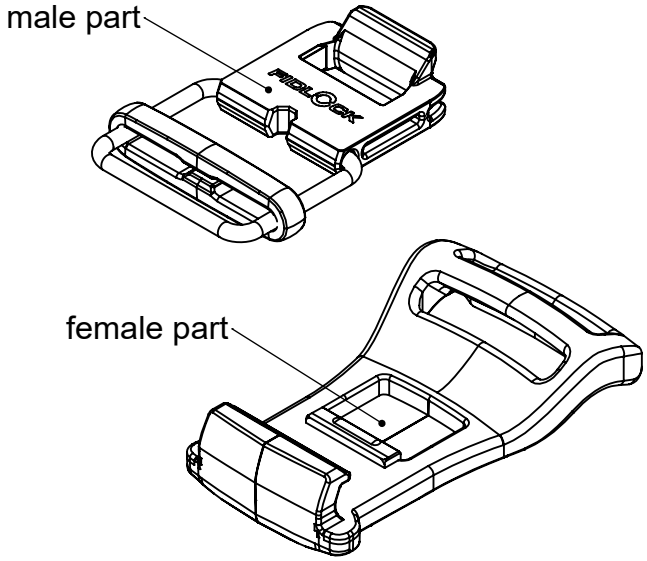


nominal values in millimeters [mm]

| | |
|---|---|
| **OPENING** | lift |
| **MATERIAL*** ** | PA66GF (59%), NdFeB (22%), stainless steel (18%), epoxy (1%) |
| **COLOUR** | black |
| **WEIGHT** | ~ 15,4 g (weighed) |
| **BREAKING LOAD**** | 515 N |

**GENERAL NOTES***

| | |
|---|---|
| **ARTICLE NO.** | H-53235-000002(BLK) |
| **PRODUCT** | HOOK 25 reverse LL |
| **SCALE** | 1:1 DIN A4 |
| **REVISION / DATE** | R00 14.08.26 |



* The manufacturer of the end products in which FIDLOCK fasteners are used, bears the responsibility for thoroughly testing that the FIDLOCK products are suitable for the intended applications.

** According to test specification QM-TP-001

*** The nominal mass fractions percentage of the materials are given as rounded whole numbers. Fractions below 0.5% are not given.

Subject to change without notice, errors excepted

Fidlock GmbH | Kirchhorster Straße 39 | 30659 Hannover | Germany